**NOTICE OF PUBLIC MEETING**
**MONDAY, NOVEMBER 23, 2026, 4 P.M.**
**TRAFFIC SAFETY COMMITTEE**
**TENTATIVE MEETING AGENDA**

I. MEETING CALLED TO ORDER

II. ROLL CALL

III. CITIZEN COMMENTS

IV. APPROVAL OF MEETING MINUTES

V. TRAFFIC CALMING PROPOSAL PACKAGE
   a. E. Essex Avenue
   b. N. Sappington Road

VI. TRAFFIC CALMING ELIGIBILITY DETERMINATION
   a. Bismark Ave.
   b. Brownell Ave.

VII. MISCELLANEOUS BUSINESS

VIII. ADJOURNMENT

Frank Johnson
City Administrator/City Clerk

Posted 5 P.M., November 19, 2026

**MINUTES**
**TRAFFIC SAFETY COMMITTEE**
**OCTOBER 19, 2026 – 6 P.M.**

MEETING CALLED TO ORDER

A meeting of the Traffic Safety Committee (TSC) of the City of Glendale was held on Monday, October 19, 2026. City Administrator Frank Johnson presided and called the meeting to order at 6:00 p.m.

ROLL CALL

Members Present: Members Absent:

- Frank Johnson, City Administrator
- Terry Jones, Public Works Superintendent
- Bob Catlett, Police Chief
- Jim Silvernail, Fire Chief
- Mike Wilcox, Mayor
- Gina Fiordelisi, Board of Aldermen
- Amy Volk, Board of Aldermen

APPROVAL OF SEPTEMBER 21, 2026 MINUTES

Alderwoman Volk motioned for approval of the September 21, 2026, minutes, seconded by Mayor Wilcox. Motion passed on voice vote.

CITIZEN COMMENTS

Leslie Drewel, 821 Essex Ave., stated she submitted the traffic calming request for Essex Avenue and is concerned about speeding on Essex Avenue. She stated that the speeding problem has gotten worse since the improvements to the roadway were completed earlier this year.

Henry Hawkins, 835 Essex Ave, stated that he is also concerned with speeding on Essex Avenue and noted that cars coming from N. Sappington Road travel very quickly.

Amber Jacobs, 1350 N. Sappington Rd., stated that she is concerned with the lack of a safe place to cross N. Sappington Road between Kirkham Avenue and Manchester Road, especially as there are many children who cross the street to visit friends or walk to school.

Michael Mosblach, 821 Essex Ave., also expressed concern about speeding on Essex Avenue. He stated that it serves as a cut-through street and carries a high level of traffic. He noted that it eventually turns into Longview Drive in Kirkwood and that the City of Kirkwood had recently installed speed humps on Longview.

TRAFFIC CALMING PROPOSAL PACKAGE – Idlewild Avenue

Mr. Johnson provided an overview of the recommended traffic calming proposal for Idlewild Avenue, which calls for conversation to one-way traffic northbound and the striping of a pedestrian walking lane. The committee discussed various aspects of the plan and how the City would conduct the resident approval survey. Alderwoman Volk stated that staff should be prepared to explain why the recommendation doesn't include speed humps based on the speed data collected. Chief Catlett motioned for approval of the traffic calming proposal package, seconded by Alderwoman Volk. The motion passed on voice vote. Mr. Johnson stated that the next step would be hosting an open house for residents to review and comment on the proposal.

TRAFFIC CALMING ELGIBILITY DETERMINATION – Essex Avenue

Mr. Johnson provided an overview of the speed data and field report for Essex Avenue. He noted that the speed data recorded a very high level of speeding that meets the Traffic Calming Policy criteria for both the 85$^{th}$ percentile speed and the average speed. The Committee discussed installing speed humps on Essex and potential locations, as well as whether an additional controlled stop could be implemented at the intersection of Hill Drive and Essex Avenue. Chief Silvernail and Mr. Johnson noted that the fire department does have concerns about the impact of speed humps on their response times and damage to equipment. Mayor Wilcox motioned for the Committee to find Essex Avenue eligible for traffic calming and for staff to direct the City Engineer to investigate potential traffic calming solutions. Alderwoman Volk seconded, and the motion passed on voice vote.

TRAFFIC CALMING ELGIBILITY DETERMINATION – N. Sappington Road

Mr. Johnson provided an overview of the speed data and field report for N. Sappington Road. He noted that the speed data recorded a relatively high level of speeding that meets the Traffic Calming Policy's primary criteria for the 85$^{th}$ percentile speed. He noted that the average speed level was slightly below the criteria, but very close. Mr. Jones stated that, prior to receiving the traffic calming request, the City had already been investigating installing a midblock crosswalk on N. Sappington Road near Warwick Lane. The proposed crosswalk would use a Rectangular Rapid Flashing Beacon (RRFB) system alert drives with bright, flashing yellow lights, similar to what currently exists on Kirkham Avenue. Mr. Jones stated that this could be incorporated into the current work being done on N. Sappington Road as part of the federally funded improvement project.

Mr. Johnson recommended that the Traffic Safety Committee find N. Sappington Road eligible for traffic calming while expediting the installation of the RRFB crosswalk system. He noted that the plans for the crosswalk installation would be included as part of the public outreach and that the Committee could focus on gathering feedback on any additional traffic calming measures.

The Committee discussed possibilities for additional signage that could be incorporated, such as solar-powered radar signs that display vehicle speeds to drivers. Ms. Jacobs asked if the crosswalk would work better as a stop sign. Mr. Jones replied that the crosswalk could be converted to a controlled stop at a later time, if the City determined it was necessary.

MISCELLANEOUS BUSINESS

Mr. Johnson proposed that the Traffic Safety Committee change the date and time of its regular meeting so that is no longer occurring directly before a regular Board of Aldermen meeting. He recommended that the meeting be moved to 4 p.m. on the 2nd or 4th Monday of the month. The Committee agreed with the recommendation and scheduled the next meeting of the TSC for Monday, Nov. 23, at 4 p.m.

ADJOURNMENT

Moved by Chief Catlett, seconded by Alderwoman Volk, to adjourn the Traffic Safety Committee meeting at 6:44 p.m.

# Memo

**To:** City of Glendale, MO – Traffic Safety Committee

**From:** Andrea Davis, P.E. – City Engineer, HR Green

**Subject:** Traffic Calming Evaluation for E. Essex Avenue

**Date:** November 5, 2026

---

In alignment with the City of Glendale's Traffic Safety Committee's (TSC) direction, HR Green has evaluated traffic calming countermeasures on E. Essex Avenue. The following information presents background information, documents our analysis of countermeasures, and serves as a portion of the Traffic Calming Proposal Package documented in Section 3.8 of the City's Traffic Calming Policy.

## Background

The TSC met on October 19th, 2026 to review a resident's traffic calming request on E. Essex Avenue. The subject segment is from the city limit with Kirkwood (just west of Hill Drive) to Sappington Road. This segment corresponds to the E. Essex Avenue Phase 1 Improvements project, which was constructed in 2025. The committee reviewed the traffic data, and based on pertinent criteria such as road type, classification, condition, and parking configuration, the TSC concluded that this corridor is an appropriate candidate for traffic calming measures.

### Existing Road Conditions:

20 mph speed limit

No Parking on either side of street

2-10' lanes with 2.5' curb and gutter on each side

5' sidewalk on the north side of E. Essex Ave.

Project Length: Approximately 0.25 miles (from just west of Hill Drive to Sappington Road)

Stop-Controlled intersection at Venneman Avenue, the midway point of subject road segment

## Traffic Calming Countermeasure Evaluation

Several options for traffic calming were evaluated, as follows:

### Traditional Speed Humps

Speed humps are placed across the entire width of the road with the exception of the gutter section. A speed hump is an effective tool for reducing speeds due to vertical deflection, and E. Essex Avenue is a good candidate based on the roadway width and speed limit of 20 mph. However, a speed hump is not desirable for EMS and fire trucks because it slows down response time significantly. For this reason, speed humps are not recommended on E. Essex Avenue.

### Offset Speed Humps

Similar to a traditional speed hump, an offset speed hump uses vertical deflection to slow drivers. Instead of placing the speed hump across both directions of traffic, an offset speed hump would be placed in just one direction of traffic, and spaced appropriately from the opposite direction's speed hump such that EMS and fire trucks can navigate around the speed humps. This removes the delay caused by the vertical deflection. However, passenger vehicles are also

susceptible to driving around the speed humps, which would be undesirable on this corridor. For this reason, offset speed humps are not recommended.

### Speed Cushions

Speed cushions function in a similar manner to speed humps, in that they reduce speed by way of vertical deflection. They differ from speed humps because they do not traverse the full width of the driving lane and instead have cutouts for wheel paths. Speed cushions are 6-7' in width, which allows EMS and fire trucks to pass over them without delay, while passenger vehicles are required to use the cushions. A speed cushion is a desirable option for the fire district and EMS. Speed cushions are recommended for E. Essex Avenue. More information regarding types of speed cushions is documented below.

### Curb Extensions

Curb Extensions, also known as curb bulb-outs or curb bump outs, are raised concrete medians which can be doweled onto the existing roadway surface. Curb extensions reduce speed by physically and visually narrowing the roadway. Typically, a curb extension would be placed within the shoulder or parking lane of the road. On E. Essex, there are no shoulders or parking lanes, and the driving lanes are relatively narrow at 10 feet wide. A curb extension would reduce the road width to a single driving lane. This is undesirable on E. Essex Avenue, and therefore curb extensions are not recommended.

### Centerline Striping

Addition of a yellow centerline stripe is a cost-effective solution that slows drivers by making the lane widths visually feel narrower. The existing lane width is relatively narrow at 10-feet and therefore is not the most suitable candidate for centerline striping. Additionally, this segment of E. Essex continues into the City of Kirkwood. Striping only a portion of an otherwise uniform corridor is not appropriate.

### Radar Speed Feedback Signs

Radar speed feedback signs are speed limit signs that have a display to show a driver their actual speed, which has been shown to effectively reduce speeds by increasing driver awareness. Temporary and permanent installations are available, and they can be solar powered or connected to a nearby power source. Radar speed feedback signs are recommended for use on E. Essex Avenue as a secondary countermeasure to the speed cushions.

## Recommended Traffic Calming Countermeasures

As documented in the previous section, the recommended traffic calming countermeasures for E. Essex Avenue are speed cushions and radar speed feedback signs. The following sections describe proposed locations, options, and costs associated with the countermeasures. Attached to this memo is a stripmap showing the proposed improvements, which can be used at a future public meeting.

### Speed Cushions

Four sets of speed cushions are proposed on E. Essex Avenue. Per FHWA's Traffic Calming Toolbox, speed cushions should be placed approximately 150 feet from unsignalized intersections, and 260-500 feet from each other in a series. Speed cushions should not be placed within an entrance. Per these recommendations, we propose the following locations:

1. Near the Kirkwood / Glendale City Limit, between the entrances of 657 E. Essex Ave. and 405 Hill Drive. This speed cushion is located about 60 feet from the intersection with Hill Drive (south). Although it is less than 150 feet from an unsignalized intersection, because Hill Drive is uncontrolled, engineering judgement leads us to believe this is an appropriate location for a speed hump.
2. Just east of the entrance at 798 E. Essex Ave. – 400 feet from speed cushion 1 and 160 feet from Venneman Avenue.

3. Just east of the entrance at 808 E. Essex Ave. – 200 feet from Venneman Avenue.
4. Just east of entrance at 835 E. Essex Ave. – 320 feet from speed cushion 3 and 150 feet from Sappington Road.

Details for the speed cushion are provided in the attached stripmap. Speed cushions should be approximately 12 feet in length and 3 inches in height, corresponding to a comfortable driving speed of 15-20 mph. The width is approximately 7 feet, and should be coordinated with local fire and ambulance districts to verify their actual wheel track dimensions. The speed cushion width can be adjusted as needed to accommodate emergency vehicles.

Speed cushions can be constructed with asphalt pavement, or a manufactured rubber material.

### Asphalt Speed Cushion:

An asphalt speed cushion is a permanent option constructed of asphalt pavement formed to the appropriate dimensions, then striped with pavement marking material.

**Pros:**

Stronger against snow plowing operations due to asphalt being “keyed-in” to existing asphalt pavement. The roadway pavement will be sawcut and surface course removed to place the speed cushion.

Material matches existing road surface, which may be a more desirable aesthetic

**Cons:**

More traffic control and longer install time required (longer resident disruption)

Would likely require outside Contractor install for asphalt and pavement markings

Unable to remove if traffic calming device is not well-received or not functioning as intended

**Cost Estimate:**

The cost estimate for asphalt speed cushions assumes a contractor will complete the necessary construction work. Time for preliminary engineering has been included to further develop plan details and develop bidding documents. A new Task Order with the City is assumed for this work. If City forces can be utilized to complete this work, the preliminary engineering fee can be reduced.

| Asphalt Speed Cushion Estimate | | | | | |
|---|---|---|---|---|---|
| **Item** | **Quantity** | **Unit** | **Unit Price** | **Amount** | **Remarks** |
| **PER UNIT ITEMS** | | | | | |
| REMOVAL OF IMPROVEMENTS (SAWCUT, REMOVE EXIST. SURFACE PAVEMENT) | 8 | EA | $ 200.00 | $ 1,600.00 | PER SPEED CUSHION |
| TYPE D BITUMINOUS CONCRETE PAVEMENT | 20 | TON | $ 350.00 | $ 7,000.00 | 8 - SPEED CUSHIONS |
| TACK COAT | 4.0 | GAL | $ 10.00 | $ 40.00 | 8 - SPEED CUSHIONS |
| PERMANENT PAVEMENT MARKINGS, PREFORMED THERMOPLASTIC, ARROW | 8 | EA | $ 325.00 | $ 2,600.00 | 8 - SPEED CUSHIONS |
| ROADWAY SIGNS (FURNISH, CITY INSTALL) | 128 | SF | $ 15.00 | $ 1,920.00 | 8 - W17-1 (SPEED HUMP) SIGNS |
| U-CHANNEL POST (FURNISH, CITY INSTALL) | 80 | LF | $ 10.00 | $ 800.00 | 8 - 10' POSTS |
| **SUBTOTAL - PER UNIT ITEMS** | | | | $ 13,960.00 | |
| **COST PER SPEED CUSHION** | | | | $ 1,745.00 | |
| **LUMP SUM ITEMS (EXCLUSIVE OF SPEED CUSHION QUANTITY)** | | | | | |
| MOBILIZATION | 1 | LS | $ 1,600.00 | $ 1,600.00 | |
| TRAFFIC CONTROL (ALL INCLUSIVE) | 1 | LS | $ 1,000.00 | $ 1,000.00 | |
| PRELIMINARY ENGINEERING | 1 | LS | $ 6,500.00 | $ 6,500.00 | DEVELOPMENT OF WORK ORDER CONTRACT, SPEED CUSHION DETAIL, DEVELOPMENT OF BIDDING DOCUMENTS |
| **SUBTOTAL - LUMP SUM ITEMS** | | | | $ 9,100.00 | |
| **TOTAL COST FOR 8 ASPHALT SPEED CUSHIONS** | | | | **$ 23,060.00** | |

### Manufactured Rubber Speed Cushion:

A pre-manufactured speed cushion is made of rubber material and bolted to the roadway pavement. The speed cushions are made to include the appropriate pavement markings, so a separate striping operation is not necessary.

**Pros:**

Temporary or permanent solution. If the location of the speed cushion is undesirable, it can be utilized in another location on E. Essex Ave. or another road.

Quick install reduces disruption to residents

Installation can likely be completed by City forces

Modular design allows for various sizes and replacement if portion gets damaged

Arrives in the correct dimensions with pavement markings applied (less engineering design effort and construction effort)

**Cons:**

Not as sturdy against winter snow plowing operations because it sits on top of pavement

Tied to a specific manufacturer once installed

**Cost Estimate:**

The cost estimate for manufactured rubber speed cushions assumes City forces will be utilized to complete the work. Time has been included for limited preliminary engineering efforts to coordinate with the manufacturer and assist with item selection. A separate task order, development of plan details, and development of a project manual is not anticipated.

| Manufactured Rubber Speed Cushion Estimate | | | | | |
|---|---|---|---|---|---|
| **Item** | **Quantity** | **Unit** | **Unit Price** | **Amount** | **Remarks** |
| **PER UNIT ITEMS** | | | | | |
| REMOVAL OF IMPROVEMENTS | 0 | EA | $ - | $ - | |
| RUBBER SPEED CUSHION (INCLUDES INSTALLATION MATERIALS SUCH AS ADHESIVE AND BOLTS; CITY INSTALL) | 8 | EA | $ 1,200.00 | $ 9,600.00 | 8 - SPEED CUSHIONS |
| PERMANENT PAVEMENT MARKINGS, PREFORMED THERMOPLASTIC, ARROW | 0 | EA | $ - | $ - | |
| ROADWAY SIGNS (FURNISH, CITY INSTALL) | 128 | SF | $ 15.00 | $ 1,920.00 | 8 - W17-1 (SPEED HUMP) SIGNS |
| U-CHANNEL POST (FURNISH, CITY INSTALL) | 80 | LF | $ 10.00 | $ 800.00 | 8 - 10' POSTS |
| **SUBTOTAL - PER UNIT ITEMS** | | | | $ 12,320.00 | |
| **COST PER SPEED CUSHION** | | | | $ 1,540.00 | |
| **LUMP SUM ITEMS (EXCLUSIVE OF SPEED CUSHION QUANTITY)** | | | | | |
| MOBILIZATION | 0 | LS | $ - | $ - | |
| TRAFFIC CONTROL (ALL INCLUSIVE) | 0 | LS | $ - | $ - | |
| PRELIMINARY ENGINEERING | 1 | LS | $ 1,700.00 | $ 1,700.00 | ASSISTANCE WITH MANUFACTURER / SIZE SELECTION (UP TO 8 HOURS) |
| **SUBTOTAL - LUMP SUM ITEMS** | | | | $ 1,700.00 | |
| **TOTAL COST FOR 8 RUBBER SPEED CUSHIONS** | | | | **$ 14,020.00** | |

## Radar Speed Feedback Signs

Two radar speed feedback signs are proposed on E. Essex Avenue. Radar speed feedback signs contain a solar panel, a traditional MUTCD compliant speed limit sign, and speed display panel. They are post-mounted. Radar speed feedback signs can be installed by City forces.

In the westbound direction, the existing speed limit sign near 811 E. Essex Ave. can be converted to a radar feedback sign. Vehicles will gain speed after the stop sign at Sappington and after the easternmost speed cushion. It is located in between speed cushions with the intent of capturing a vehicle's peak speed. The existing westbound speed limit sign is located on a power pole. The existing sign will be removed and replaced with a post-mounted feedback sign.

In the eastbound direction, the existing speed limit sign is located at 398 Hill Drive. It is proposed to remove the speed limit sign at 398 Hill Drive (the "no parking" sign can remain in place) and place a radar speed feedback sign at 760 E. Essex Ave. The new location shifts the speed feedback sign farther away from the westernmost speed cushion with the intent of capturing the vehicle's peak speed.

The proposed radar speed feedback signs are permanent solutions. Temporary options, mounted on trailers, are available and are typically used for data collection. Temporary options were not evaluated because the City regularly deploys "Stealth" cameras for data collection purposes, and data has already been gathered for E. Essex Avenue. It is recommended to deploy the "Stealth" cameras after installation of the speed cushions and speed feedback signs to evaluate their effectiveness.

**Cost Estimate:**

The cost estimate for speed feedback signs assumes City forces will be utilized to complete the work. Time has been included for limited preliminary engineering to coordinate with the manufacturer and assist with item selection. A separate task order, development of plan details, and development of a project manual is not anticipated.

| Radar Speed Feedback Sign Estimate | | | | | |
|---|---|---|---|---|---|
| **Item** | **Quantity** | **Unit** | **Unit Price** | **Amount** | **Remarks** |
| **PER UNIT ITEMS** | | | | | |
| RADAR SPEED FEEDBACK ASSEMBLY (INCLUDES SOLAR PANEL, FEEDBACK SIGN, SIGN FACEPLATE, AND BRACKET MOUNT; CITY INSTALL) | 2 | EA | $ 3,149.00 | $ 6,298.00 | 2 - FEEDBACK ASSEMBLIES |
| ROADWAY SIGNS (FURNISH, CITY INSTALL) | 10 | SF | $ 15.00 | $ 150.00 | 2 - R2-1 SPEED LIMIT 20 SIGNS |
| PIPE POST (FURNISH, CITY INSTALL) | 28 | LF | $ 15.00 | $ 420.00 | 2 - 14' POSTS |
| **SUBTOTAL - PER UNIT ITEMS** | | | | $ 6,868.00 | |
| **COST PER SPEED FEEDBACK SIGN** | | | | $ 3,434.00 | |
| **LUMP SUM ITEMS (EXCLUSIVE OF SIGN QUANTITY)** | | | | | |
| MOBILIZATION | 0 | LS | $ - | $ - | |
| TRAFFIC CONTROL (ALL INCLUSIVE) | 0 | LS | $ - | $ - | |
| PRELIMINARY ENGINEERING | 1 | LS | $ 1,700.00 | $ 1,700.00 | ASSISTANCE WITH MANUFACTURER / MATERIAL SELECTION (UP TO 8 HOURS) |
| **SUBTOTAL - LUMP SUM ITEMS** | | | | $ 1,700.00 | |
| **TOTAL COST FOR 2 SPEED FEEDBACK SIGNS** | | | | **$ 8,568.00** | |

# E. ESSEX AVENUE
# TRAFFIC CALMING EXHIBIT
## CITY OF GLENDALE, MISSOURI

CITY OF Glendale

LEGEND

- PAVEMENT/SIDEWALK/CURB CONSTRUCTION 2025
- EXISTING RETAINING WALL CONSTRUCTION 2025
- SIGN SYMBOL
- EXISTING SIGN CONSTRUCTION 2025
- PROPOSED SIGN

SCALE

0 50 100 150

HRGreen
Building Communities. Improving Lives.

TYPICAL SECTION

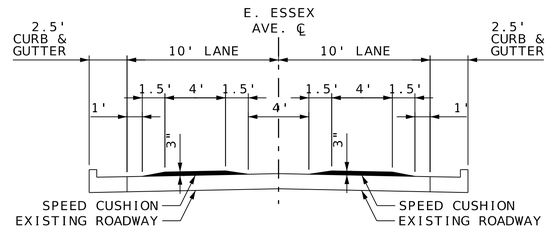


NOT TO SCALE

KIRKWOOD CITY LIMIT
GLENDALE CITY LIMIT
HILL DRIVE
VENNEMAN AVENUE
N. SAPPINGTON RD.
N. HOLMES AVENUE
E. ESSEX AVENUE

SPEED HUMP W17-1
SPEED LIMIT 20 R2-1
STOP R1-1
SPEED CUSHION
SPEED LIMIT SIGN (TBR)
NEW SPEED FEEDBACK SIGN
CONVERT TO SPEED FEEDBACK SIGN

657 E. ESSEX AVE.
405 HILL DR.
701 E. ESSEX AVE.
725 E. ESSEX AVE.
735 E. ESSEX AVE.
401 VENNEMAN AVE.
400 VENNEMAN AVE.
809 E. ESSEX AVE.
807 E. ESSEX AVE.
811 E. ESSEX AVE.
813 E. ESSEX AVE.
817 E. ESSEX AVE.
819 E. ESSEX AVE.
821 E. ESSEX AVE.
835 E. ESSEX AVE.
405 N. SAPPINGTON RD.
534 N. HOLMES AVE.
398 HILL DR.
760 E. ESSEX AVE.
780 E. ESSEX AVE.
798 E. ESSEX AVE.
800 E. ESSEX AVE.
802 E. ESSEX AVE.
804 E. ESSEX AVE.
806 E. ESSEX AVE.
808 E. ESSEX AVE.
812 E. ESSEX AVE.
818 E. ESSEX AVE.
822 E. ESSEX AVE.
826 E. ESSEX AVE.
339 N. SAPPINGTON RD.

SPEED CUSHION DETAIL

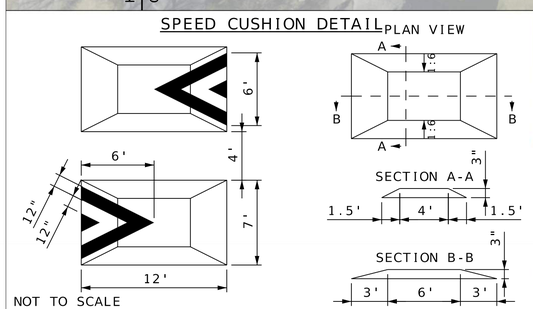


NOT TO SCALE

EXAMPLE SPEED CUSHIONS



# Traffic Calming Proposal Package – N. Sappington Road

## 1. Description and location of proposed measures.

Staff are recommending two measures for implementation:

A) **Installation of a crosswalk with a rectangular rapid flashing beacon (RRFB) at Warwick Lane and Glenbrook Avenue** – This will allow a safer spot for pedestrians to cross N. Sappington Road without having to travel down to Kirkham Ave. The purchase of the RRFB has already been approved by the Board of Aldermen as part of the N. Sappington Road preservation project that is currently underway.

B) **Installation of solar-powered speed radar signs** – These solar-powered signs will be permanent features alerting drivers to their current speed.

Staff are not recommending speed humps due to the high volume of traffic on the roadway, its frequent use by emergency vehicles, and the desire to not impede snow plowing efforts on an important arterial.

## 2. Estimated installation cost and anticipated annual maintenance cost.

The cost of the RRFB is $12,751 and is already included as part of the City's capital improvement budget for FY27. The City received bids from Tapco for the solar-powered speed radar signs at a price of $2,814 each. Annual maintenance costs are anticipated to be minimal.

## 3. Expected speed and volume reduction based on comparable implementations.

The primary goal of the RRFB is to provide a safer place for pedestrians to cross and to draw drivers' attention to pedestrian behavior. It is not anticipated to have a significant impact on vehicle speed.

The City has seen success in reducing speeds on streets when the portable speed radar trailer has been implemented, and this is backed up by studies on their effectiveness. According to research published by the U.S. Department of Transportation in 2021, "dynamic speed feedback signs" create overall reductions in average speeds of 2 to 4 mph.

## 4. Emergency services access assessment

The police and fire departments do not anticipate that the proposed measures would impact access for emergency services.

## 5. Snow removal compatibility assessment.

The public works department does not anticipate that the proposed measures would impact existing snow removal practices.

## 6. Conceptual design drawing or sketch.

Given the relatively simple nature of the proposed measures, no conceptual designs have been created for this proposal.

## 7. Identification of directly impacted properties.

The Traffic Calming Policy recommends that the street segment for directly impacted properties be bounded by the nearest intersecting streets. Using this approach, the impacted residents would be properties on N. Sappington Road between Nancy Carl Lane/Glen Elm Drive and Queen Anne Place/Glenmoor Avenue. It also recommends for intersections that it include "properties immediately adjacent to the intersection where the device is proposed." This would encompass 15 properties.

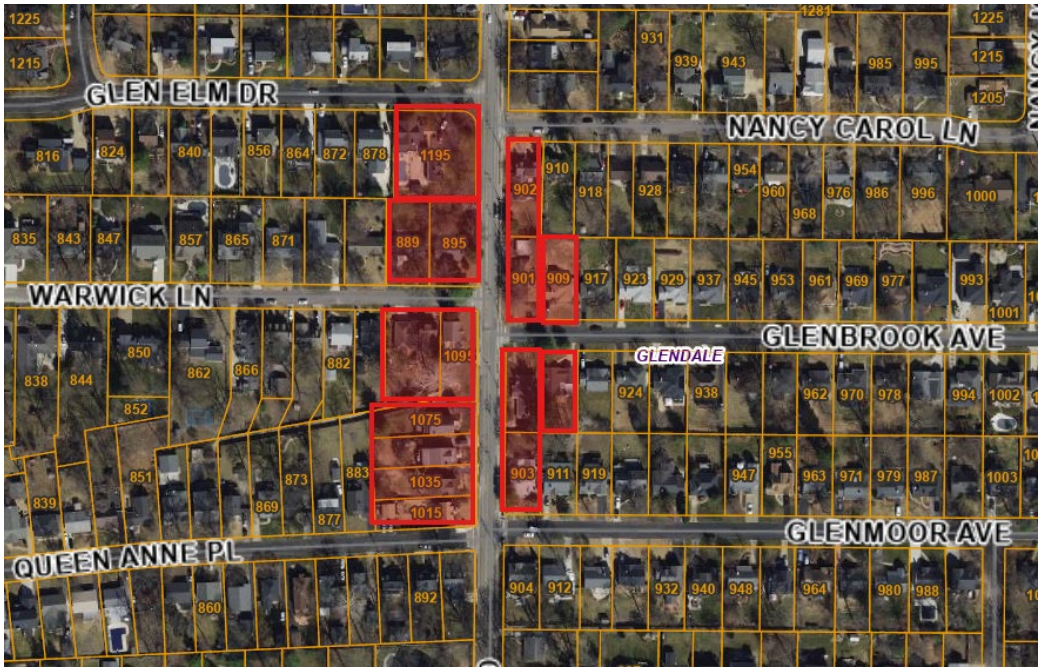

However, the policy also states that the street segment can be determined by the City based on the “logical termini” of the street segment or engineering and operational considerations, so this does provide us some flexibility to expand the scope of directly impacted properties, if desired.

# Traffic Calming Request Form

Print Del

**Submitted by:**

**Submitted On:** 2026 10 08 19:42:59

**Submission IP:** 107.202.192.250 (172.31.67.87)
proxy-IP (raw-IP)

**Status:** Open

**Priority:** Normal

**Assigned To:** Frank Johnson

**Due Date:** Open

**Attachments**

- image.jpg 2026 10 08 07:43:00 pm

# Traffic Calming Request Form

This form can be used to request that the City evaluate a street for traffic calming measures under the City of Glendale Traffic Calming Policy and Program. Submission of this form initiatives the review and evaluation process described in Section 3 of the policy. Please note that it does not guarantee that a street will be found eligible or that a project will be implemented.

## Requester Information

*** Name**

Samantha Syrett

*** Address**

761 BISMARK AVE

*** Phone**

[redacted]

*** Email**

[redacted]

*** Requesting on behalf of (check one)**

- [x] **Individual resident or property owner**
- [ ] **Neighborhood or HOA**
- [ ] **School District**
- [ ] **Civic or Religious Institution**

## Location of Concern

*** Street Name or Intersection**

Bismark Ave

Use the fields below to define the segment or area that you are requesting for evaluation using cross streets or other clear points of reference.

**From (cross street or landmark):**

Berry

**To (cross street or landmark):**

Rock hill

## Description of Traffic Problem

*** Nature of concern (check all that apply)**

- [x] **Speeding**
- [ ] **Cut-through traffic**
- [x] **Pedestrian Safety**
- [x] **Bicyclist Safety**
- [ ] **Other**

*** Please describe the observed problem in detail**

The parked cars on Bismark and the hills make it impossible to see cars coming, especially in the morning and evenings when it is busy. Very low visibility at all times. There is a bus stop at the end of Bismark (Berry road) and there are kids walking on bismark WITHOUT a side walk and cars speeding and swerving around parked cars

*** Time(s) of day when the problem typically occurs:**

630am-830pm

*** Day(s) of the week/frequency of the problem:**

Every day

**Please upload any supporting documentation (such as photographs)**

Choose File No file chosen

## Proposed Solution (optional)

**If you have a suggested solution, describe it below. This information is for reference only — the City is not bound by any proposed solution and will identify appropriate measures through its own evaluation process.**

Ideally, there would be a sidewalk on Bismark Ave connecting rock hill portion of bismark to Berry. I would also be so pleased to see 1 2 speed bumps to encourage drivers to be alert and drive slower.

## Supporting Signatures and Certification

*** Per Section 3.2 of the Traffic Calming Policy, your request must include signatures from at least three (3) affected residents in addition to the requester. The signature form must include their printed name, street address, signature and date.**

Choose File No file chosen

The Per Section 3.2 of the Traffic Calming Policy, your request must include signatures from at least three (3) affected residents in addition to the requester. The signature form must include their printed name, street address, signature and date. field is required

Directly impacted residents shall include all residential properties that front on the street segment proposed for traffic calming.

*** Certification**

- [x] **I certify that the information provided on this form is true and accurate to the best of my knowledge.**

*Questions? Contact the City Administrator's office at (314) 965 3600 or visit www.glendalemo.org. See the City of Glendale Traffic Calming Policy and Program (Section 3) for the full request, review, and approval process.*

CITY OF Glendale POLICE

424 N. Sappington Road
Glendale, Missouri 63122
Phone: (314) 965-0000
Fax: (314) 965-2912

Robert A. Catlett, Jr., Ph.D.
Chief of Police

TO: Traffic Safety Committee

FROM: Robert A. Catlett, Jr., Ph.D., Chief of Police

DATE: November 19, 2026

RE: Review of Traffic Data from "Stealth" Radar Cameras – Bismark Avenue

Following herewith you will find the results of traffic data from our "Stealth Radar Cameras," which were installed in the 700 block of Bismark Avenue from Thursday, October 22, 2026, through Tuesday, October 27, 2026.

Some definitions for clarification. For direction, the manufacturer, "Stalker Radar," uses the terms "Closing" (vehicles traveling towards the camera) and "Away" (vehicles traveling away from the camera). The "Excessive Speed Threshold" can be set for any speed above the Posted Speed Limit; however, in this particular instance, Terry and I chose 10 MPH above the speed limit as this is the Police Department's "speed tolerance" where a ticket or warning would be issued to a violator.

**Bismark Avenue (Near N. Berry Road)**

| SPEED LIMIT | TOTAL VEHICLE COUNT | VEHICLES UNDER/ AT LIMIT | VEHICLES ABOVE SPEED LIMIT (26-34 MPH) | VEHICLES ABOVE EXCESSIVE LIMIT (35+ MPH) | AVERAGE SPEED ALL VEHICLES | 85th Percentile Speed | MAXIMUM SPEED DETECTED |
|---|---|---|---|---|---|---|---|
| 25 | 5,307 | 1,684 (32%) | 3,260 (61%) | 363 (7%) | 27.6 | 32 MPH | 55 MPH |

**Bismark Avenue (Near Belvedere Lane)**

| SPEED LIMIT | TOTAL VEHICLE COUNT | VEHICLES UNDER/AT LIMIT | VEHICLES ABOVE SPEED LIMIT (26-34 MPH) | VEHICLES ABOVE EXCESSIVE LIMIT (35+ MPH) | AVERAGE SPEED ALL VEHICLES | 85th Percentile Speed | MAXIMUM SPEED DETECTED |
|---|---|---|---|---|---|---|---|
| 25 | 5,174 | 2,133 (41%) | 2,741 (53%) | 300 (6%) | 26.7 | 32 MPH | 48 MPH |

***Internal Memorandum***

TO: Frank Johnson, City Administrator

FROM: Terry Jones, Public Works Superintendent

DATE: November 4, 2026

RE: Bismark Ave Field Assessment

Frank,

The city has received reports of speeding vehicles and a traffic calming request from property owners along Bismark Ave.

In response, city staff installed traffic data collectors along Bismark Ave between October 22 – October 27, 2026. The collected data was delivered to you on October 27. Additionally, the Traffic Calming Policy requires a Field Assessment of the roadway considering the following street conditions:

- Street width, number of lanes, and presence of parking lanes
- Sight distance and horizontal alignment
- Location of driveways, intersections, and access points
- Proximity to schools, parks, bus stops, and senior facilities
- Existing traffic control devices (signs, signals, pavement markings)
- Utility infrastructure that may affect device placement
- Snowplow routes and snow removal logistics

Bismark Ave is a 2-lane asphalt roadway running east/west between the intersection of N. Berry Rd on the west side, and the shared city limit line with the City of Rock Hill on the east side, allowing for 2-directional traffic flow. This street has vertical asphalt curbing along both sides of the street. The total length of the street is 1,297’ with a consistent width of 24’ measured from the face of the curb on one side of the street to the curb face on the opposing side. Parking is allowed along the north side of the street and prohibited along the south side.

Bismark Ave carries a minor collector classification with the East/West Gateway Council of Governments and therefore eligible to receive federal aid for the construction of street and sidewalk improvements. Currently, there are no sidewalks along the portion of Bismark Ave in Glendale, however, the City of Rock Hill has constructed improvements along this street, including a sidewalk along the north side, between the shared city limit line with Glendale, continuing east to Rock Hill Rd.

There are 12 homes that front Bismark Ave, all of which are located along the north side of the street, and each with driveway access leading directly to Bismark Ave. There are no homes that front Bismark Ave on the south side of the street, however there are 3 corner lots along the south side of the street that have driveway access leading to Bismark Ave: 433 & 432 Belvedere Lane, and 437 Barron Lane.

In addition to the 12 residential properties, Bismark Ave is also home to Glendale's Public Works facility, which has 3 points of egress leading directly to Bismark Ave, one of which serves as the facility's parking lot.

The portion of Bismark Ave located in Glendale is near several larger roadways which then connect drivers and residents to many businesses and facilities.

Bismark Ave terminates at N. Berry Rd on the west end. N. Berry Rd is a St. Louis County arterial roadway leading to Manchester Rd to the north, and I-44 on the south.

Manchester Rd (MoDot highway 100) is located 1,280 feet (0.24 miles) from the intersection of Bismark Ave and N. Berry Rd.

Bismark Ave continues 2,124 feet (0.40 miles) east, beyond the shared city limit line with the City of Rock Hill and terminates at Rock Hill Rd which is another arterial roadway that extends between Manchester Rd to the north and Lockwood Ave to the south.

Miriam Middle School in Rock Hill is located 822 feet (0.16 miles) east of the shared city limit line with the City of Rock Hill.

The St. Louis Childeren's & Camber Youth Mental Health Facility is located 2,447 feet (0.46 miles) east of the shared city limit line with the City of Rock Hill.

N. Glendale Elementary School is located 4,933 feet (0.93 miles) from the intersection of Bismark Ave and N. Berry Rd.

Larson Park in Webster Groves is located 4,570 feet (085 miles) from the intersection of Bismark Ave and N. Berry Rd.

There are no utilities, either surface mounted, underground, or overhead, that would prevent the addition of traffic calming devices, however, as common with most Glendale streets, there are limitations to the right-of-way and street widths, which would limit the type of traffic calming methods that could be implemented.

While Bismark Ave carries a minor collector classification, it does not receive preferential treatment for snow removal. However, because the Public Works facility is located along Bismark Ave, this street is commonly cleared first simply because it is adjacent to the facility.

Below is a detail of the roadway indicating length, width, alignment, sightline distances, and access points.

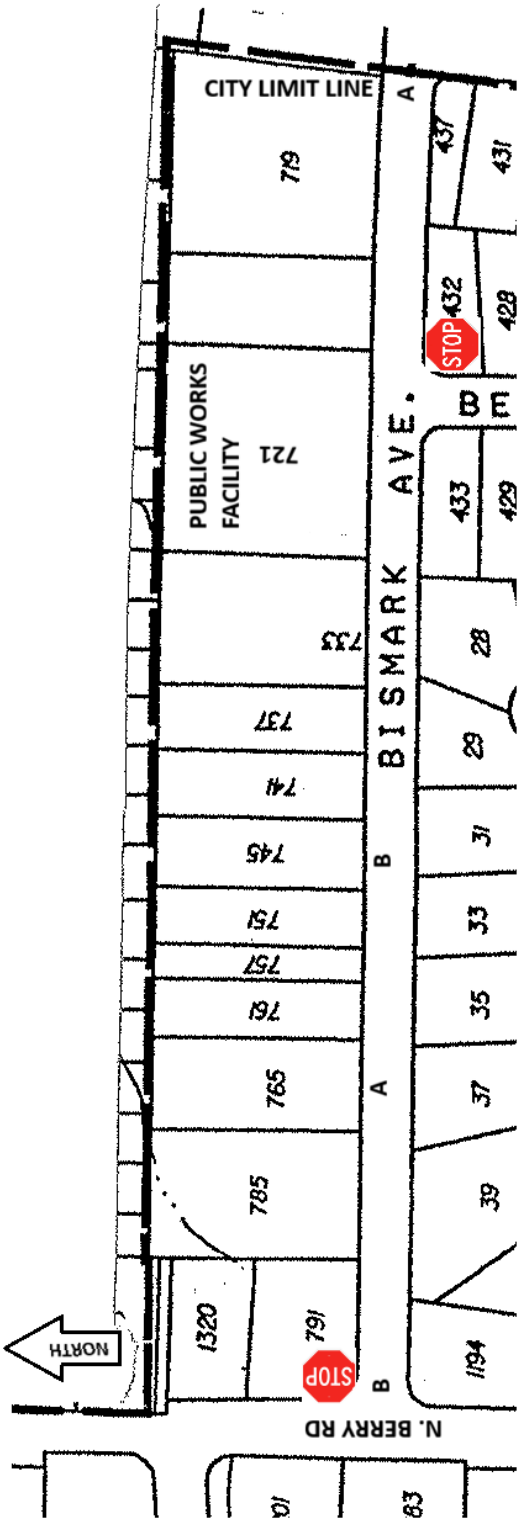


Total length: 1,297 feet

Consistent width of 24 feet

Sightline range between A & A: 976 feet

Sightline range between B & B: 555 feet

# Traffic C Iming Reque t Form

This form can be used to request that the City evaluate a s cet for traffic calming measure under the City of Glendale Traffic Calming Policy and Program. Submission of this form initiatives the review and valuation process described in Section 3 of the policy. Please note that it does not guarantee that a street will be found eligible or that a proj t will be implemented.

## Requester Information

* Name PETER THEODORE

* Address 926 BROWNELL AVE

* Phone [redacted]

* Email [redacted]

* Requesting on behalf of (check one)

- [x] Individual resident or property owner
- [ ] Neighborhood or HOA
- [ ] School District
- [ ] Civic or Religious Institution

You must choose at least one option

## Location of Concern

* Street Name or Intersection 900 - 1000 block of Brownell BROWNELL AVE ~~BETWEEN SAPPINGTON + IDLEWILD~~

Use the fields below to define the segment or area that you are requesting for evaluation using cross streets or other clear points of reference.

From (cross street or landmark):

SAPPINGTON

To (cross street or landmark):

IDLEWILD

## Description of Traffic Problem

* Nature of concern (check all that apply)

- [x] Speeding
- [ ] Cut-through traffic
- [x] Pedestrian Safety
- [x] Bicyclist Safety
- [ ] Other

You must choose at least one option

* Please describe the observed problem in detail

People drive too fast - far in excess of the speed limit. It is a danger to all of us, especially our children.

*** Time(s) of day when the problem typically occurs:**

any time

*** Day(s) of the week/frequency of the problem:**

any time

**Please upload any supporting documentation (such as photographs)**

Choose File No file chosen

## Proposed Solution (optional)

**If you have a suggested solution, describe it below. This information is for reference only — the City is not bound by any proposed solution and will identify appropriate measures through its own evaluation process.**

Please install speed bumps for the 900-1000 block of Brunnell Ave

## Supporting Signatures and Certification

*** Per Section 3.2 of the Traffic Calming Policy, your request must include signatures from at least three (3) affected residents in addition to the requester. The signature form must include their printed name, street address, signature and date.**

Choose File No file chosen

Directly impacted residents shall include all residential properties that front on the street segment proposed for traffic calming.

*** Certification**

☐ **I certify that the information provided on this form is true and accurate to the best of my knowledge.**

You must choose at least one option

*Questions? Contact the City Administrator's office at (314) 965-3600 or visit www.glendalemo.org. See the City of Glendale Traffic Calming Policy and Program (Section 3) for the full request, review, and approval process.*

Submit

Submission is disabled until all form errors have been corrected.

The undersigned, residents of the 900 and 1000 blocks of Brownell Avenue between Sappington and Idlewild, request that the City of Glendale install speed bumps on our block because of the excessive and dangerous speeding by automobiles that endangers all of us, most of all our children.

| Name | Address | Signature | Date |
|---|---|---|---|
| Peter Theodore | 926 | | 10/17/26 |
| Sam Gaines | 936 | | 10/17/26 |
| John Mohler | 931 | | 10/17/26 |
| William Weckback | 919 | | 10/17/26 |
| James Saracino | 910 | | 10/17/26 |
| | | | |
| | | | |
| | | | |
| | | | |
| | | | |

CITY OF Glendale POLICE

424 N. Sappington Road
Glendale, Missouri 63122
Phone: (314) 965-0000
Fax: (314) 965-2912

Robert A. Catlett, Jr., Ph.D.
Chief of Police

TO: Traffic Safety Committee

FROM: Robert A. Catlett, Jr., Ph.D., Chief of Police

DATE: November 19, 2026

RE: Review of Traffic Data from "Stealth" Radar Cameras – Brownell Avenue

Following herewith you will find the results of traffic data from our "Stealth Radar Cameras," which were installed in the 900-1000 blocks of Brownell Avenue from Thursday, October 29, 2026, through Sunday, November 1, 2026, and from Thursday, November 12, 2026, through Tuesday, November 17, 2026.

The "Excessive Speed Threshold" can be set for any speed above the Posted Speed Limit; however, in this particular instance, we chose 10 MPH above the speed limit as this is the Police Department's "speed tolerance" where a ticket or warning would be issued to a violator.

**900-1000 blocks of Brownell Avenue (10/29/26 to 11/1/26)**

| SPEED LIMIT | TOTAL VEHICLE COUNT | VEHICLES UNDER/ AT LIMIT | VEHICLES ABOVE SPEED LIMIT (21-29 MPH) | VEHICLES ABOVE EXCESSIVE LIMIT (30+ MPH) | AVERAGE SPEED ALL VEHICLES | 85th Percentile Speed | MAXIMUM SPEED DETECTED |
|---|---|---|---|---|---|---|---|
| 20 | 1,455 | 535 (37%) | 875 (60%) | 45 (3%) | 21.8 | 26 MPH | 53 MPH |

**900-1000 blocks of Brownell Avenue (11/12/26 to 11/17/26)**

| SPEED LIMIT | TOTAL VEHICLE COUNT | VEHICLES UNDER/AT LIMIT | VEHICLES ABOVE SPEED LIMIT (21-29 MPH) | VEHICLES ABOVE EXCESSIVE LIMIT (30+ MPH) | AVERAGE SPEED ALL VEHICLES | 85th Percentile Speed | MAXIMUM SPEED DETECTED |
|---|---|---|---|---|---|---|---|
| 20 | 1,860 | 427 (23%) | 1,286 (69%) | 147 (8%) | 23.5 | 28 MPH | 52 MPH |

***Internal Memorandum***

TO: Frank Johnson, City Administrator

FROM: Terry Jones, Public Works Superintendent

DATE: November 5, 2026

RE: 900 & 1000 blocks of Brownell Ave Field Assessment

Frank,

The city has received reports of speeding vehicles and a traffic calming request from property owners along the 900 & 1000 blocks of Brownell Ave.

In response, city staff installed traffic data collectors along this portion of Brownell Ave between October 29 – November 3, 2026. The collected data was delivered to you on November 5. Additionally, the Traffic Calming Policy requires a Field Assessment of the roadway considering the following street conditions:

- Street width, number of lanes, and presence of parking lanes
- Sight distance and horizontal alignment
- Location of driveways, intersections, and access points
- Proximity to schools, parks, bus stops, and senior facilities
- Existing traffic control devices (signs, signals, pavement markings)
- Utility infrastructure that may affect device placement
- Snowplow routes and snow removal logistics

This section of Brownell ave is a 2-lane, 20 MPH, asphalt roadway running east and west between N. Sappington Rd and Idlewild Pl with vertical concrete curbing along both sides of the street. The total length of this section of Brownell Ave is 1,288 feet with a consistent width of 23.5 feet.

There are 43 homes that front this section of Brownell Ave, all but 3 of these homes have driveway access leading directly to Brownell Ave.

Parking is currently allowed on both sides of the street. The Parking Assessment Reports recommends changing this to one-sided parking but does not provide a recommended side for the restriction.
Below is a detail of the roadway indicating length, width, alignment, sightline distances, and access points.

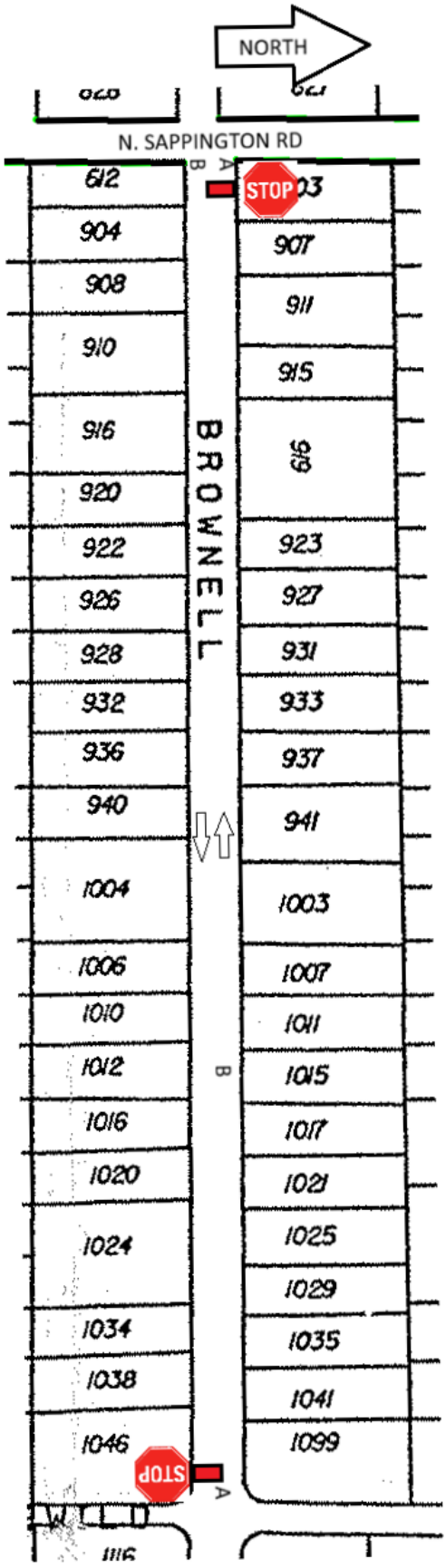


Overall length: 1,288’

Average width: 23.5’

“Stop” sign locations and orientations are shown as-is.

White stop bar pavement markings within intersection of Idlewild Lane and N. Sappington Rd indicated by red boxes.

Longitudinal sightlines extend between A to A and B to B.

The distance between A to A is approximately 1,288’.

The distance between B to B is approximately 881’.

Parking is allowed along both sides, and the length of Brownell Ave.

There are no traffic signals along this street.

This street has an unmarked school bus stop at the southeast corner of Brownell Ave and N. Sappington Rd. In addition, there are non-compliant, segmented, and somewhat deteriorated 3-foot wide sidewalks on the south side of this portion of Brownell Ave between the intersection with N. Sappington Rd continuing east to 1004 Brownell Ave. There are no sidewalks on either side of the street beyond that point.

The distance to the parking lot entrance at N. Glendale Elementary School from Brownell Ave is:

- From the intersection of Brownell Ave at N. Sappington Rd: 777' (0.15 miles)
- From the intersection of Brownell Ave at Idlewild Pl: 2,091' (0.40 miles)

The distance to the parking lot entrance at Larson Park in Webster Groves from Idlewild Lane is:

- From the intersection of Brownell Ave at N. Sappington Rd: 6,323' (1.2 miles)
- From the intersection of Brownell Ave at Idlewild Ln: 4,135' (0.78 miles)

The distance to the parking lot entrance at Glendale City Hall from Idlewild Lane is:

- From the intersection of Brownell Ave at Idlewild Pl: 2,780' (0.52 miles)
- From the intersection of Brownell Ave at N. Sappington Rd: 1,483' (0.28 miles)

This street has underground gas, water, and sewer lines. There are overhead electric & communication lines along the south side of the street with service drops to each home extending overhead to the north side.

For snow removal purposes, Brownell Ave is considered a major street and therefore receives preferential snow removal treatments. This street is cleared of snow and ice ahead of, and more frequently, than surrounding streets.

It's important to note that while this report focuses on the 900 & 1000 blocks of the street, Brownell Ave extends between the shared city limit line with the City of Kirkwood on its west side, and N. Berry Rd on the east side. These connections make Brownell Ave one of the few Glendale streets that extend the full width of the Glendale map and directly connects users to the arterial roadways of Dickson St in Kirkwood, and N. Sappington Rd & N. Berry Rd in Glendale. Because of the placement and relatively straight-line configuration of the roadway, Brownell Ave is often considered as a cut-through street.